CWT® WORKTOOLS

"Finishing What You Started"

TESTED AND PROVED 1 year warranty

CWT Pro Cutter 160

The unique feature of using a linear bearing system to guide the cutting head guarantees an excellent performance and extreme precision, unmatched by any other cutter in the market.

DESIGNED TO ATTACHED TO CWT 1630, 1640, 1647, 1736 PLATINUM TABLES with CUTTER SHELF ATTACHMENT

HIGH ACCURACY & VERSATILITY! ROBUSTNESS & USER-FRIENDLY!

MyBinding.com When Image Matters.

mybinding.com
1-800-944-4573

MODEL **CWT Pro Cutter 160**

PART NO

CWT-726823 CWT Pro Cutter adds to the equipment an integrated aluminum base with two different cutting tracks: one with a narrow groove for general purposes, to be used with the knife blade; and other with a built-in cut-strip to be used with the circular blade.

CWT Pro Cutter is also equipped with an integral lift and hold mechanism, which can be used from both sides to facilitate the material loading.

CWT Pro Cutter features a revolutionary dual cutting head system to allow the user to have two different cutting heads installed at one time and block them if required.

The different cutting heads available provide the equipment with a great versatility and productivity.

- User-friendly machine easy and simply to install.
- Plastic strip for sight line to visualize the cutting line.
- Cutting thickness up to 20 mm for semi-rigid materials.
- Dust free operation to safely work close to printers.

FACTS **Cutting features**

SEMI RIGID	Maximum Thickness	
Foamboard	13mm / 20mm*	0,51'' / 0,78'' *
Cardboard	13mm / 20mm*	0,51'' / 0,78'' *
PVC	5mm / 10mm*	0,20'' / 0,39'' *
Honeycomb	13mm / 20mm*	0,51'' / 0,78'' *
Corrugated plastic	13mm	0,51''
Mountboard	3,5mm	0,14''

* Optional accessory required.

FLEXIBLE MATERIALS

Fabric / Textiles
Plastic film
Banner materials
Paper
Vinyl
Magnetic sheet

"FINISHING WHAT YOU STARTED"

CWT WORKTOOLS

"Finishing What You Started"

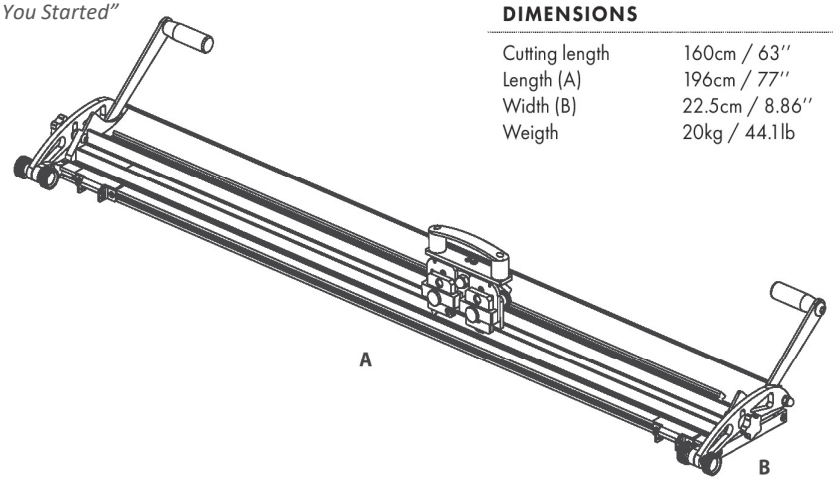

DIMENSIONS

Cutting length	160cm / 63''
Length (A)	196cm / 77''
Width (B)	22.5cm / 8.86''
Weigth	20kg / 44.1lb

ACCESSORIES

SEMI-RIGIDS
Cutting Head
Up to 13 mm
(Included)

CIRCULAR BLADE
Cutting Head
Flexible materials
(Included)

ACRYLIC
Cutting Head
Up to 4 mm
(Accessory)

REVERSE
Cutting Head
Cut from right to left
(Accessory)

EXTRA BLADE
Cutting Head
Up to 20 mm
(Accessory)

Acrylic Cutting Head	CWT-452292
Acrylic Scoring Blade	CWT-130147
Reverse Cutting Head	CWT-452293
Extra Blade Cutting Head	CWT-452294
Trapezoid Blades (100 units)	CWT-130130
Circular Blade (1 unit)	CWT-130126
Cutter Shelf Attachment – 1630, 1640 & 1647 Tables	CWT-ING
Cutter Shelf Attachment – 1736 Platinum Table	CWT-PRO

MyBinding.com When Image Matters.

mybinding.com
1-800-944-4573

MODEL **CWT Pro Cutter 160**

LINEAR BEARING SYSTEM
The combination of the robust bearing block with the steel linear rail guarantees an accurate and smooth cutting head movement.

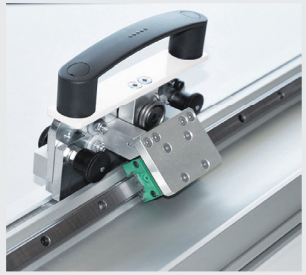

INTERCHANGEABLE CUTTING TRACK
Cutting position easily changeable in few seconds through the quick knob system.

ERGONOMIC HANDLE SYSTEM
Ergonomic handle system to comfortably cut in both directions.

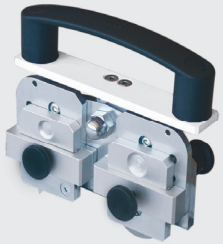

FULL LENGTH GRIP STRIPS
Both the cutter and the aluminum base are equipped with full length grip strips to aid clamping and protect printed media.

LIFT AND HOLD MECHANISM
Useful and comfortable handle system to raise the cutter bar.

BLOCKING THE BLADE
Possibility of blocking the blade at the cutting position to facilitate the cut of big sizes.
No need of downward hand pressure.

CUTTER SHELF
Attach your cutter to the table end without interferring the work surface.

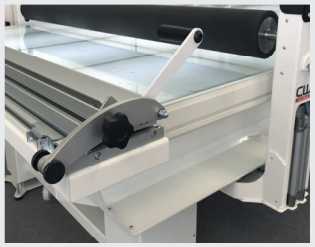

"FINISHING WHAT YOU STARTED"